ORLANDO srl

Chiavari (Ge) Italia
Tel: Italia + 0185 + 38.50.10
Fax: Italia + 0185 + 38.50.11
e-mail: orlando@orlando.it
http://www.orlando.it

Electromechanical pressure switches

OsiSense XM

For power circuits, types FTG, FSG and FYG

SC FSG 2 MX

SC FYG 22 MX

SC FYG 32 MX

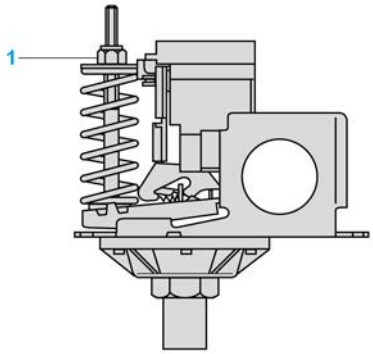

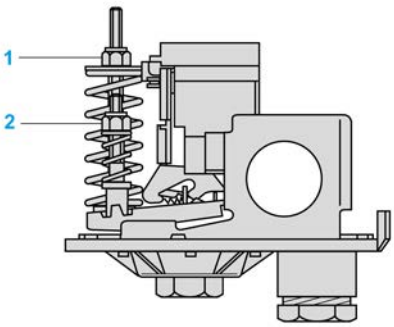

Presentation

Pressure switches types FTG, FSG and FYG are switches for power circuits. They are used to control the pressure of water, up to 10.5 bar.

2 types of product are available:
- pressure switches type FTG with fixed differential, for detection of a single threshold,
- pressure switches type FSG and FYG with an adjustable differential, for regulation between 2 thresholds.

For specific needs, these 2 types of product can be supplied in IP 65 versions, thus ensuring a higher degree of protection. They feature 2 cable entries, fitted with cable gland, and are referenced **F•G •NE**.

Setting

Pressure switches with fixed differential (type FTG)

Only the switching point on rising pressure is adjustable.

Switching point on rising pressure
The switching point on rising pressure (PH) is set by adjusting screw-nut 1.

Switching point on falling pressure
The switching point on falling pressure (PB) is not adjustable.
The difference between the tripping and resetting points of the contact is the natural differential of the switch (contact differential, friction, etc.).

Pressure switches with adjustable differential (types FSG and FYG)

When setting the pressure switch, adjust the switching point on rising pressure (PH) first and then the switching point on falling pressure (PB).

Switching point on rising pressure
The switching point on rising pressure (PH) is set by adjusting screw-nut 1.

Switching point on falling pressure
The switching point on falling pressure (PB) is set by adjusting screw-nut 2.

ORLANDO srl

Chiavari (Ge) Italia
Tel: Italia + 0185 + 38.50.10
Fax: Italia + 0185 + 38.50.11
e-mail: orlando@orlando.it
http://www.orlando.it

Electromechanical pressure switches

OsiSense XM

For power circuits, types FTG, FSG and FYG

Characteristics

Environmental characteristics

Pressure switch type			FTG ● FTG ●NE	FSG ● and FYG ● FSG ●NE and FYG ●NE
Conformity to standards			CE, IEC/EN 60730	
Protective treatment			Standard version: "TC"	
Ambient air temperature		°C	For operation: 0…+ 45. For storage: - 30…+ 80	
Fluids controlled			Fresh water, sea water (0…+ 70 °C)	
Materials			Case: polystyrene, resistant to mechanical impact Component materials in contact with fluid: nylon 6/6, zinc plated steel, nitrile	
Operating position			All positions	
Electric shock protection			Class I conforming to IEC 536	
Degree of protection conforming to IEC/EN 60529	FTG ●, FSG ● and FYG ●		IP 20	
	FTG ●NE, FSG ●NE and FYG ●NE		IP 65	
Operating rate		Op. cycles/h	600	
Repeat accuracy			< 2 %	
Fluid connection	F●G 2, FYG ●2		G 1/4 (BSP female) conforming to NF E 03-005, ISO 228	
	F●G 9		R 1/4 (BSP male) conforming to NF E 03-004, ISO 7	
Electrical connection	FTG ●, FSG ● and FYG ●		Terminals. 2 cable entries, with grommet	
	FTG ●NE, FSG ●NE and FYG ●NE		Terminals. 2 entries incorporating n° 13 plastic cable gland (DIN Pg 13.5)	

Contact block characteristics

Rated operational characteristics			Ie = 10 A, Ue = ∼ 250 V conforming to EN 60730-1			
Power ratings of controlled motors	Voltage		∼ 2-pole 1-phase	∼ 2-pole 3-phase	∼ 2-pole 1-phase	∼ 2-pole 3-phase
	110 V		0.75 kW (1 HP)	1.1 kW (1.5 HP)	0.75 kW (1 HP)	1.1 kW (1.5 HP)
	230 V		1.1 kW (1.5 HP)	1.5 kW (2 HP)	1.5 kW (2 HP)	2.2 kW (3 HP)
	400 V		1.5 kW (2 HP)	1.5 kW (2 HP)	1.5 kW (2 HP)	2.2 kW (3 HP)
Rated insulation voltage conforming to IEC/EN 60947-1		V	Ui = 500			
Rated impulse withstand voltage conforming to IEC/EN 60947-1		kV	U imp = 6			
Type of contacts			1 2-pole 2 NC (4 terminal) contact, snap action			
Short-circuit protection			20 A cartridge fuse type gG			
Connection			Screw clamp terminals. Clamping capacity, min: 1 x 1 mm², max: 2 x 2 mm²			
Electrical durability at an operating rate of 600 operating cycles/hour		Op. cycles	40 000		100 000	

ORLANDO srl

Chiavari (Ge) Italia
Tel: Italia + 0185 + 38.50.10
Fax: Italia + 0185 + 38.50.11
e-mail: orlando@orlando.it
http://www.orlando.it

References, characteristics

Electromechanical pressure switches

OsiSense XM
For power circuits, type FSG
Size 0-6 Bar adjustable differential, for regulation between 2 thresholds. Switches with 2-pole 2 NC contact.
Degree protection IP 20 or IP 65

Fluid connection		**G 1/4 (BSP female)**	**R 1/4 (BSP male)**	**G 1/4 (BSP female)**	**R 1/4 (BSP male)**
		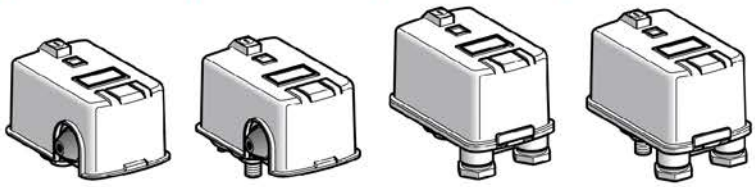			
Adjustable range of switching point (PH) (Rising pressure)		0-6 Bar			
Degree of protection conforming to IEC/EN 60529		IP 20		IP 65	
References					
Fluids controlled	Fresh water, sea water, from 0 °C to + 70 °C *(1)*	**FSG 2**	**FSG 9**	**FSG 2NE** *(2)*	**FSG 9NE**
Weight (kg)		0.340			
Complementary characteristics not shown under general characteristics (page 30380-EN/3)					
Possible differential (subtract from PH to give PB)	Max. at low setting	2.1 bar (30.45 psi)			
	Max. at middle setting	2.2 bar (31.9 psi)			
	Max. at high setting	2.3 bar (33.35 psi)			
	Min. at low setting	1 bar (14.5 psi)			
	Min. at middle setting	1.1 bar (15.95 psi)			
	Min. at high setting	1.2 bar (17.4 psi)			
Maximum permissible pressure	Per cycle	5.75 bar (83.38 psi)			
	Accidental	8 bar (116 psi)			
Destruction pressure		20 bar (290 psi)			
Mechanical life		1 x 10^6 operating cycles			
Cable entry		2 cable entries, with grommet		2 entries with n° 13 plastic cable gland (DIN Pg 13.5)	
Clamping capacity		–		9 to 13 mm	
Pressure switch type		Diaphragm			

(1) Component materials of units in contact with the fluid, see page 30380-EN/3.
*(2) Variant: for a G 3/8 female fluid entry that pivots throughout 360°, select the **FSG 2NEG**.*

Operating curves

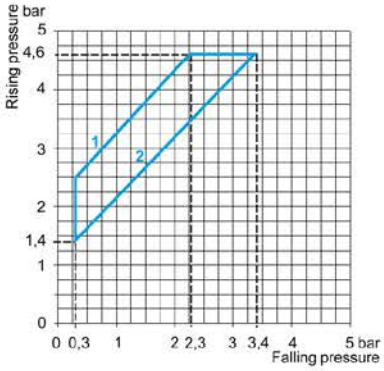

1 Maximum differential
2 Minimum differential

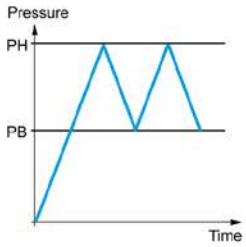

— Adjustable value

Connections

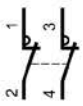

ORLANDO srl

References, characteristics

Electromechanical pressure switches

OsiSense XM

For power circuits, type FYG
Sizes 7 and 10.5 bar (101.5 and 152.3 psi), adjustable differential, for regulation between 2 thresholds. Switches with 2-pole 2 NC contact. Degree of protection IP 20 or IP 65

Fluid connection		**G 1/4 (BSP female)**			
		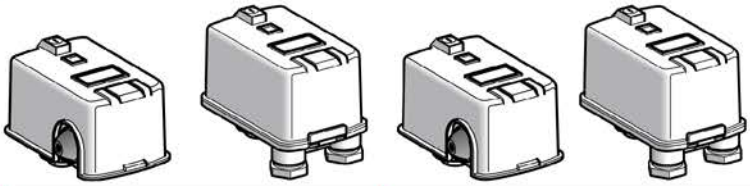			
Adjustable range of switching point (PH) (Rising pressure)		**2.8…7 bar (40.6…101.5 psi)**		**5.6…10.5 bar (81.2…152.3 psi)**	
Degree of protection conforming to EN/IEC 60529		**IP 20**	**IP 65**	**IP 20**	**IP 65**
References					
Fluids controlled	Fresh water, sea water, from 0 °C to + 70 °C *(1)*	**FYG 22** *(2)*	**FYG 22NE**	**FYG 32** *(3)*	**FYG 32NE**
Weight (kg)		0.340			
Complementary characteristics not shown under general characteristics (page 30380-EN/3)					
Possible differential (subtract from PH to give PB)	Max. at low setting	2.3 bar (33.35 psi)		3 bar (43.5 psi)	
	Max. at middle setting	2.5 bar (36.25 psi)		3.2 bar (46.4 psi)	
	Max. at high setting	2.7 bar (39.15 psi)		3.4 bar (49.3 psi)	
	Min. at low setting	1.2 bar (17.4 psi)		1.9 bar (27.55 psi)	
	Min. at middle setting	1.4 bar (20.3 psi)		2.1 bar (30.45 psi)	
	Min. at high setting	1.6 bar (23.2 psi)		2.3 bar (33.35 psi)	
Maximum permissible pressure	Per cycle	8.75 bar (126.9 psi)		13 bar (188.5 psi)	
	Accidental	15 bar (217.5 psi)		15 bar (217.5 psi)	
Destruction pressure		20 bar (290 psi)		20 bar (290 psi)	
Mechanical life		1 x 10^6 operating cycles			
Cable entry		2 cable entries, with grommet			
Pressure switch type		Diaphragm			

(1) Component materials of units in contact with the fluid, see page 30380-EN/3.
*(2) Variant: for a 2.8 to 7 bar, IP 20, pressure switch with R 1/4 (BSP male) fluid entry, select the **FYG 29**.*
*(3) Variant: for a 5.6 to 10.5 bar, IP 20, pressure switch with R 1/4 (BSP male) fluid entry, select the **FYG 39**.*

Operating curves

FYG 22

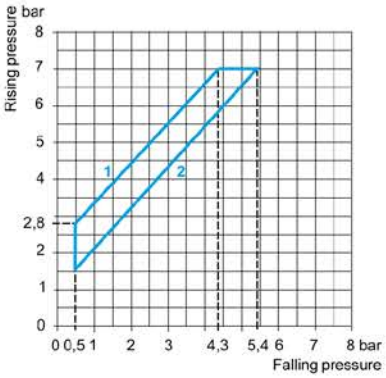

1 Maximum differential
2 Minimum differential

FYG 32

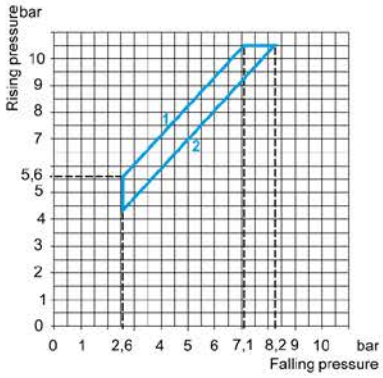

1 Maximum differential
2 Minimum differential

Connections

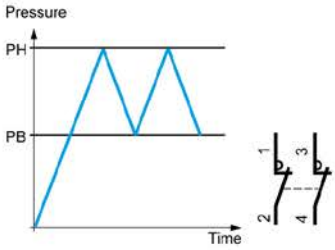

— Adjustable value

ORLANDO srl

Chiavari (Ge) Italia
Tel: Italia + 0185 + 38.50.10
Fax: Italia + 0185 + 38.50.11
e-mail: orlando@orlando.it
http://www.orlando.it

References, characteristics

Electromechanical pressure switches

OsiSense XM
For power circuits, type FTG
Size 0-6 Bar fixed differential, for detection of a single threshold. Switches with 2-pole 2 NC contact.
Degree of protection IP 20 or IP 65

Fluid connection		G 1/4 (BSP female)	R 1/4 (BSP male)	G 1/4 (BSP female)	R 1/4 (BSP male)
		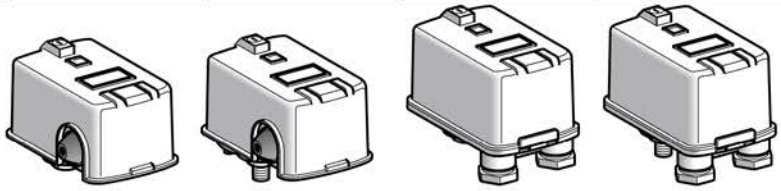			
Adjustable range of switching point (PH) (Rising pressure)		0-6 Bar			
Degree of protection conforming to IEC/EN 60529		IP 20		IP 65	
References					
Fluids controlled	Fresh water, sea water, from 0 °C to + 70 °C *(1)*	FTG 2	FTG 9	FTG 2NE	FTG 9NE
Weight (kg)		0.340			
Complementary characteristics not shown under general characteristics (page 30380-EN/3)					
Natural differential (subtract from PH to give PB)	At low setting	1.1 bar (15.95 psi)			
	At middle setting	1.3 bar (18.85 psi)			
	At high setting	1.5 bar (21.75 psi)			
Maximum permissible pressure	Per cycle	5.75 bar (83.38 psi)			
	Accidental	8 bar (116 psi)			
Destruction pressure		20 bar (290 psi)			
Mechanical life		4 x 10^5 operating cycles			
Cable entry		2 cable entries, with grommet		2 entries with n° 13 plastic cable gland (DIN Pg 13.5)	
Clamping capacity		–		9 to 13 mm	
Pressure switch type		Diaphragm			

(1) Component materials of units in contact with the fluid, see page 30380-EN/3.

Operating curves

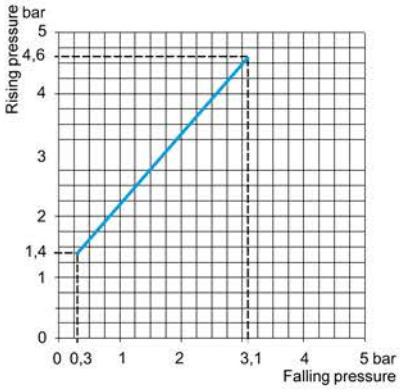

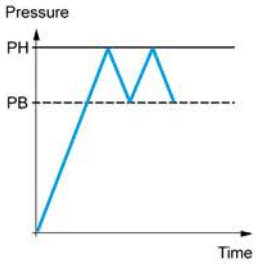

— Adjustable value
---- Non adjustable value

Connections

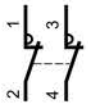

ORLANDO srl

Chiavari (Ge) Italia
Tel: Italia + 0185 + 38.50.10
Fax: Italia + 0185 + 38.50.11
e-mail: orlando@orlando.it
http://www.orlando.it

Dimensions

Electromechanical pressure switches

OsiSense XM

For power circuits, types FTG, FSG and FYG

Dimensions

FTG 2/FSG 2

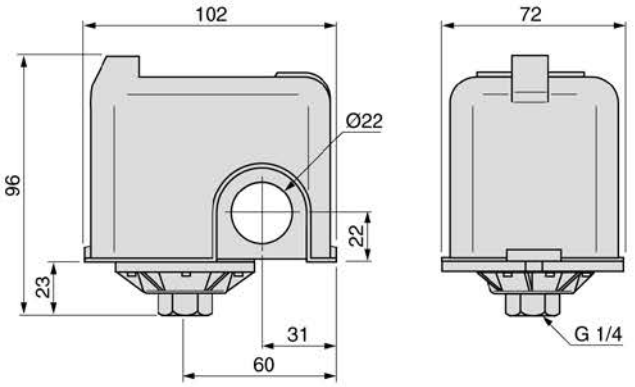

FTG 2NE/FSG 2NE

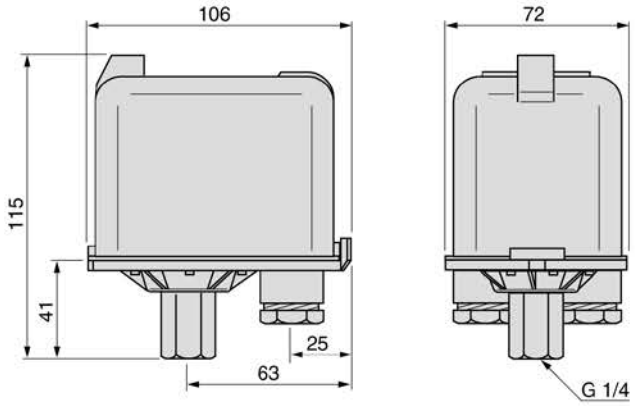

FTG 9/FSG 9

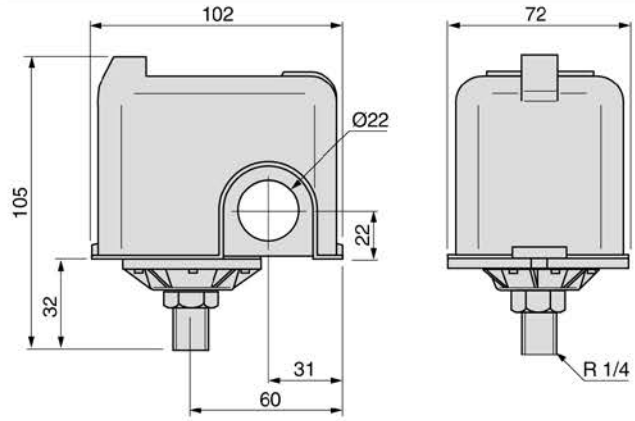

FTG 9NE/FSG 9NE

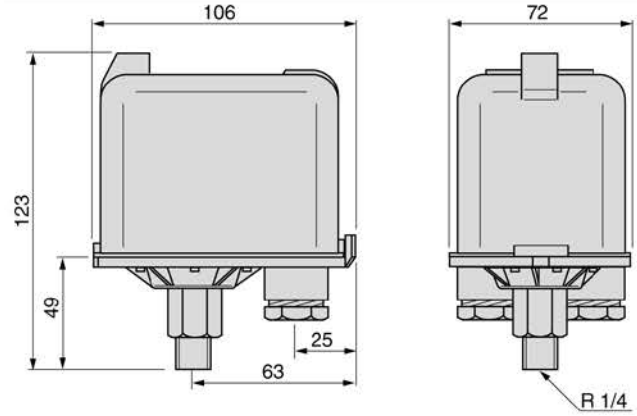

FYG 22, FYG 32

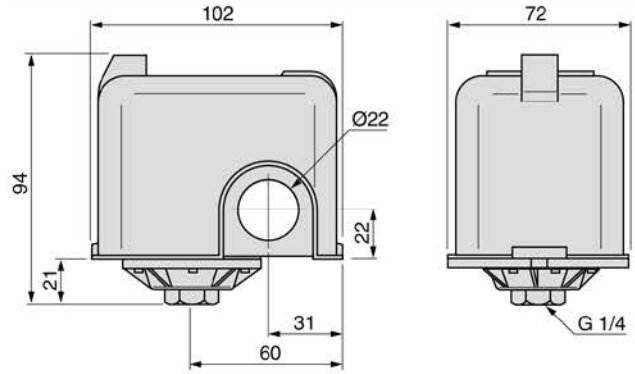

FYG 22NE, FYG 32NE

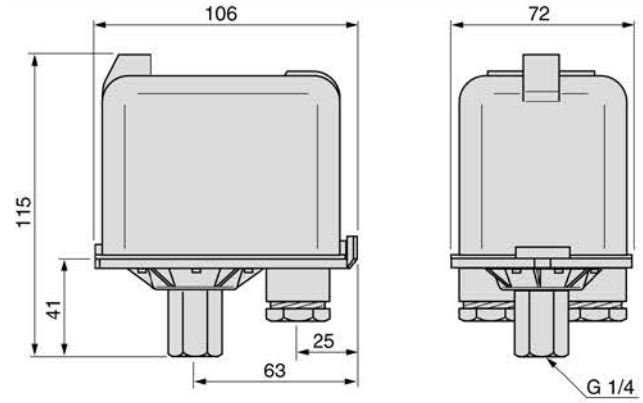

ORLANDO srl

Chiavari (Ge) Italia
Tel: Italia + 0185 + 38.50.10
Fax: Italia + 0185 + 38.50.11
e-mail: orlando@orlando.it
http://www.orlando.it

Electromechanical pressure switches

For power circuits, type XMP

Presentation

Pressure switches type XMP are switches for power circuits (direct switching), with an adjustable differential.
They are used to control the pressure of water and air, up to 25 bar.

Equipment fitted to the various models

Case

Pressure switches type XMP, depending on the model, include:

■ 3 types case:
□ bare case,
□ case with On/Off knob (black): used as a switch for starting and stopping the installation,
□ case with reset knob (yellow): necessary when the safety requirements of the system include tripping in the event of overpressure. Resetting is not automatic on return to normal pressure, and it can only be achieved by manually turning the "Reset" knob".

■ 2 levels of sealing:
□ IP 54,
□ IP 65.

Decompression valve

Depending on the model, 2 types of decompression valve can be fitted to pressure switches type XMP:
■ Straight, instant connection, decompression valve (connection by Ø 6 mm plastic tube).
■ Straight, olive connection, decompression valve (connection by Ø 6 mm plastic or metal tube).

Setting

When setting XMP pressure switches, adjust the switching point on rising pressure (PH) first and then the switching point on falling pressure (PB).

Switching point on rising pressure
The switching point on rising pressure (PH) is set by adjusting the screw-nut or knurled knob 1.
Tighten either the nut or knurled knob 1 to increase the high point switching value.

Switching point on falling pressure
The switching point on falling pressure is set by adjusting screw-nut 2.
Tighten nut 2 to reduce the low point switching value (increase in differential).

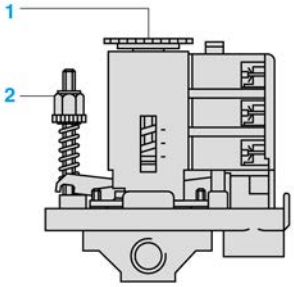

ORLANDO srl

Chiavari (Ge) Italia
Tel: Italia + 0185 + 38.50.10
Fax: Italia + 0185 + 38.50.11
e-mail: orlando@orlando.it
http://www.orlando.it

Characteristics

Electromechanical pressure switches
For power circuits, type XMP

Environmental characteristics		
Conformity to standards		CE, IEC/EN 60947-4-1
Ambient air temperature	**°C**	For operation: - 25…+ 70 For storage: - 40…+ 70
Fluids controlled		Air, fresh water, sea water (0…+ 70 °C)
Materials		Case: polyamide impregnated with fibreglass Component materials in contact with fluid: chromated zinc alloy (fluid entry), canvas covered nitrile (diaphragm)
Operating position		All positions
Vibration resistance		3 gn (10…500 Hz), conforming to IEC 68-2-6
Shock resistance		50 gn, conforming to IEC 68-2-27
Electric shock protection		Class I conforming to IEC 536
Degree of protection		IP 54 conforming to IEC/EN 60529 or IP 65 for universal model
Operating rate	**Op. cycles/h**	≤ 600
Repeat accuracy		< 3.5%
Fluid connection		G 1/4, 4 x G 1/4 or G 3/8 (BSP female) conforming to NF E 03-005, ISO 228
Electrical connection		2 tapped entries for n° 13 (DIN Pg 13.5) cable gland

Contact block characteristics				
Rated insulation voltage	**V**	Ui = 500 conforming to IEC/EN 60947-1		
Rated impulse withstand voltage	**V**	U imp = 6 kV conforming to IEC/EN 60 947-1		
Type of contacts		One 2-pole 2 N/C or 3-pole 3 N/C contact, snap action		
Resistance across terminals	**mΩ**	≤ 25 conforming to NF C 93-050 method A or IEC 255-7 category 3		
Terminal referencing		Conforming to CENELEC EN 50013		
Short-circuit protection		Cartridge fuse type Am		
Connection		Screw clamp terminals. Minimum clamping capacity: 2 x 4 mm²		
Electrical durability Operating rate: 600 operating cycles/hour Load factor: 0.4		Power	Number of operating cycles	
		kW	∼ 400 V, 3-phase	∼ 230 V, 3-phase
		1.5	1 000 000	600 000
		2.2	700 000	–
		3	500 000	–

ORLANDO srl

Chiavari (Ge) Italia
Tel: Italia + 0185 + 38.50.10
Fax: Italia + 0185 + 38.50.11
e-mail: orlando@orlando.it
http://www.orlando.it

References, characteristics

Electromechanical pressure switches

Type XMP, IP 54
Size 6 bar (87 psi)
Adjustable differential, for regulation between 2 thresholds
Switches with 2-pole 2 N/C or 3-pole 3 N/C contact

Fluid connection	**G 1/4 (BSP female)**	

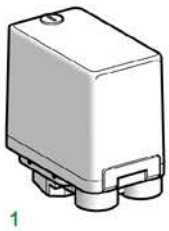

1

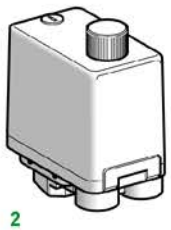

2

Adjustable range of switching point (PH) (Rising pressure)	**1…6 bar (14.5…87 psi)**	
Type of contact	2-pole 2 N/C	3-pole 3 N/C
References *(1)*		
Switches without decompression valve		
Bare case 1	**XMP A06B2131**	**XMP A06C2131**
Case with reset knob 2	**XMP B06B2131**	–
Case with On/Off knob 2	**XMP C06B2131**	**XMP C06C2131**
Weight (kg)	0.430	
Switches with straight decompression valve, instant connection		
Bare case 1	**XMP D06B2131**	**XMP D06C2131**
Case with On/Off knob 2	**XMP E06B2131**	**XMP E06C2131**
Weight (kg)	0.450	

Complementary characteristics not shown under general characteristics (page 30395/3)		
Possible differential (subtract from PH to give PB)	Min. at low setting	0.8 bar (11.6 psi)
	Min. at high setting	1.2 bar (17.4 psi)
	Max. at high setting	4.2 bar (60.9 psi)
Destruction pressure		30 bar (435 psi)
Mechanical life		1 million operating cycles
Cable entry		2 entries tapped for n° 13 cable gland, conforming to NF C 68-300 (DIN Pg 13.5)
Pressure switch type		Diaphragm

*(1) References for individually packaged switches. Also available packaged in lots of 10. To order, add the letter **C** to the reference selected from above. Example: reference for lot of 10 pressure switches **XMP A06B2131** in one package becomes **XMP A06B2131C**.*

Operating curves

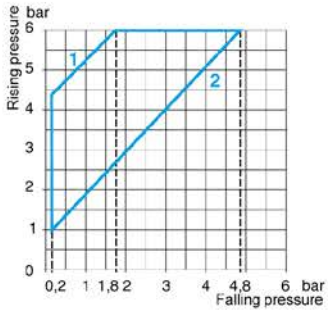

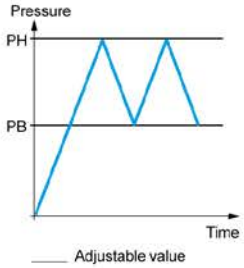

1 Maximum differential
2 Minimum differential

ORLANDO srl

Chiavari (Ge) Italia
Tel: Italia + 0185 + 38.50.10
Fax: Italia + 0185 + 38.50.11
e-mail: orlando@orlando.it
http://www.orlando.it

4 x G 1/4 (BSP female)		G 3/8 (BSP female)	
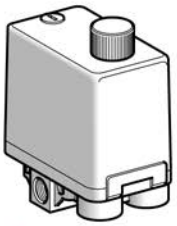 2		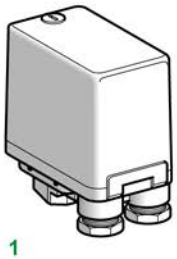 1	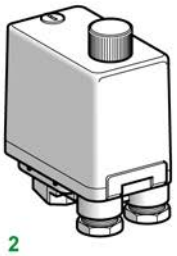 2
1.3…12 bar (18.85…174 psi)			
2-pole 2 N/C	3-pole 3 N/C	2-pole 2 N/C	3-pole 3 N/C
References *(1)*			
Switches without decompression valve			
–		**XMP A12B2242**	**XMP A12C2242**
–		**XMP B12B2242**	–
–		**XMP C12B2242**	**XMP C12C2242**
–		0.430	
Switches with straight decompression valve, instant connection			
–		**XMP D12B2242**	**XMP D12C2242**
XMP E12B2431	**XMP E12C2431**	**XMP E12B2242**	**XMP E12C2242**
0.450			
Switches with straight decompression valve, olive connection			
–			
–			

Complementary characteristics not shown under general characteristics (page 30395/3)

1 bar (14.5 psi)	
1.7 bar (24.6 psi)	
8.4 bar (121.8 psi)	
30 bar (435 psi)	
1 million operating cycles	
2 entries tapped for n° 13 cable gland, conforming to NF C 68-300 (DIN Pg 13.5)	2 entries incorporating n° 13 plastic cable gland (DIN Pg 13.5) Clamping capacity 9 to 13 mm
Diaphragm	
Other versions	Pressure switches not listed above, comprising the equipment proposed for the choice of reference. Please consult your Regional Sales Office.

*(1) References for individually packaged switches. Also available packaged in lots of 10. To order, add the letter **C** to the reference selected from above. Example: reference for lot of 10 pressure switches **XMP A12B2242** in one package becomes **XMP A12B2242C**.*

Terminal connections

XMP ●●●B●●●●	XMP ●●●C●●●●
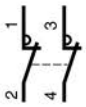	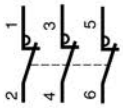

ORLANDO srl

Chiavari (Ge) Italia
Tel: Italia + 0185 + 38.50.10
Fax: Italia + 0185 + 38.50.11
e-mail: orlando@orlando.it
http://www.orlando.it

References, characteristics *(continued)*

Electromechanical pressure switches

Type XMP, IP 54
Size 25 bar (362.5 psi)
Adjustable differential, for regulation between 2 thresholds
Switches with 2-pole 2 N/C or 3-pole 3 N/C contact

Fluid connection	**G 1/4 (BSP female)**

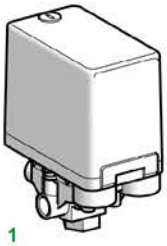
1

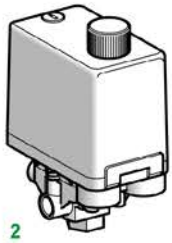
2

Adjustable range of switching point (PH) (Rising pressure)	**3.5…25 bar (50.75…362.5 psi)**
Type of contact	2-pole 2 N/C

References *(1)*

Switches without decompression valve	
Bare case 1	**XMP A25B2131**
Case with reset knob 2	**XMP B25B2131**
Case with On/Off knob 2	**XMP C25B2131**
Weight (kg)	0.650
Switches with straight decompression valve, olive connection	
Case with On/Off knob 2	**XMP R25B2131**
Weight (kg)	0.670

Complementary characteristics not shown under general characteristics (page 30395/3)

Possible differential (subtract from PH to give PB)	Min. at low setting	3.4 bar (49.3 psi)
	Min. at high setting	4.5 bar (65.2 psi)
	Max. at high setting	20 bar (290 psi)
Destruction pressure		100 bar (1450 psi)
Mechanical life		1 million operating cycles
Cable entry		2 entries tapped for n° 13 cable gland, conforming to NF C 68-300 (DIN Pg 13.5)
Pressure switch type		Diaphragm

*(1) References for individually packaged switches. Also available packaged in lots of 10. To order, add the letter **C** to the reference selected from above. Example: reference for lot of 10 pressure switches **XMP A25B2131** in one package becomes **XMP 25B2131C**.*

Operating curves

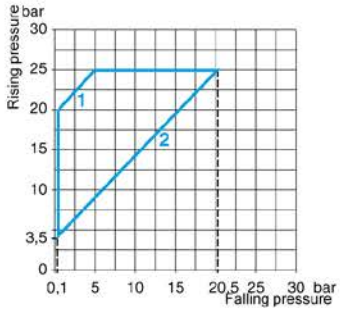

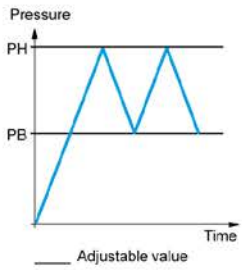

1 Maximum differential
2 Minimum differential

ORLANDO srl

Chiavari (Ge) Italia
Tel: Italia + 0185 + 38.50.10
Fax: Italia + 0185 + 38.50.11
e-mail: orlando@orlando.it
http://www.orlando.it

G 1/4 (BSP female)

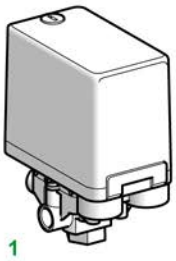

1

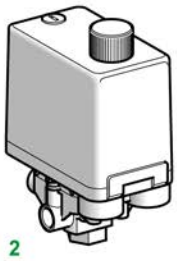

2

3.5…25 bar (50.75…362.5 psi)

3-pole 3 N/C

References *(1)*

Switches without decompression valve

XMP A25C2131	–
XMP C25C2131	0.650

Switches with straight decompression valve, olive connection

XMP R25C2131	0.670

Complementary characteristics not shown under general characteristics (page 30395/3)

3.4 bar (49.3 psi)
4.5 bar (65.2 psi)
20 bar (290 psi)
100 bar (1450 psi)
1 million operating cycles
2 entries tapped for n° 13 cable gland, conforming to NF C 68-300 (DIN Pg 13.5)
Diaphragm

Other versions Pressure switches not listed above, comprising the equipment proposed for the choice of reference. Please consult your Regional Sales Office.

*(1) References for individually packaged switches. Also available packaged in lots of 10. To order, add the letter **C** to the reference selected from above. Example: reference for lot of 10 pressure switches **XMP A25C2131** in one package becomes **XMP A25C2131C**.*

Terminal connections

XMP ●●●B●●●●

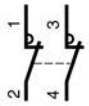

XMP ●●●C●●●●

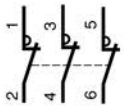

ORLANDO srl

Chiavari (Ge) Italia
Tel: Italia + 0185 + 38.50.10
Fax: Italia + 0185 + 38.50.11
e-mail: orlando@orlando.it
http://www.orlando.it

Electromechanical pressure switches

For power circuits, type XMP

Accessories and replacement parts

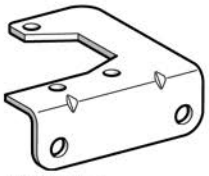

XMA ZL001

XMP MDR01

DE9 PM1201

DE9 PM1202

XMP Z3●

References

Description		Reference	Weight kg
Fixing bracket		**XMA ZL001**	0.035
Knurled adjustment knob, Ø 36 mm fits over adjustment screws to facilitate setting		**XMP MDR01**	0.010
N° 13 plastic cable gland	With anti pull-out ring (for cable Ø 6…9 mm)	**DE9 PM1201**	0.005
	Without anti pull-out ring (for cable Ø 6…9 mm)	**DE9 PM1202**	0.005
	With anti pull-out ring (for cable Ø 9…12.5 mm)	**DE9 PM1203**	0.005
	Without anti pull-out ring (for cable Ø 9…12.5 mm)	**DE9 PM1204**	0.005

Description	For pressure switch	Reference	Weight kg
Diaphragms	Size 6 bar	**XMP Z31**	0.005
	Size 12 bar	**XMP Z32**	0.005
	Size 25 bar	**XMP Z33**	0.005

ORLANDO srl

Chiavari (Ge) Italia
Tel: Italia + 0185 + 38.50.10
Fax: Italia + 0185 + 38.50.11
e-mail: orlando@orlando.it
http://www.orlando.it

Electromechanical pressure switches

For control circuits, types XMX and XMA

Presentation

Pressure switches type XMX and XMA are switches for control circuits, with an adjustable differential.
They are used to control the pressure of water and air, up to 25 bar.

Equipment fitted to the various models

Location of setting screw

Pressure switches type XMX have an internal setting screw that is only accessible after removing the cover.
Pressure switches type XMA have an external setting screw that is accessible without removing the cover.

Case

Pressure switches type XMX have a black opaque case.
Pressure switches type XMA can have a transparent case or a black opaque case.

Setting

When setting pressure switches XMX or XMA, adjust the switching point on rising pressure (PH) first and then the switching point on falling pressure (PB).

Switching point on rising pressure
The switching point on rising pressure (PH) is set by adjusting screw-nut 1.

Switching point on falling pressure
The switching point on falling pressure (PB) is set by adjusting screw-nut 2.

ORLANDO srl

Chiavari (Ge) Italia
Tel: Italia + 0185 + 38.50.10
Fax: Italia + 0185 + 38.50.11
e-mail: orlando@orlando.it
http://www.orlando.it

Characteristics

Electromechanical pressure switches

For control circuits, types XMX and XMA

Environmental characteristics		
Conformity to standards		CE, IEC/EN 60947-5-1
Product certifications		UL, CSA, ccc
Protective treatment		"TC"
Ambient air temperature	**°C**	For operation: - 25…+ 70 for 6 and 25 bar versions - 25…+ 55 for 12 bar versions
		For storage: - 40…+ 70
Fluids controlled	**°C**	Air, fresh water, sea water: 0…+ 70 °C for 6 and 25 bar versions 0…+ 55 °C for 12 bar versions
Materials		Case: polycarbonate impregnated with Lexan 500R fibreglass (black opaque cover) or polycarbonate impregnated with Lexan 123 fibreglass (transparent cover) Component materials in contact with fluid: chromated zinc alloy (fluid entry), canvas covered nitrile (diaphragm)
Operating position		All positions
Electric shock protection		Class I conforming to IEC 536
Degree of protection		IP 54 conforming to IEC/EN 60529
Operating rate	**Op. cycles/h**	600
Repeat accuracy		< 3.5%
Fluid connection		G 1/4 or 4 x G 1/4 (BSP female) conforming to NF E 03-005, ISO 228
Electrical connection		Terminals 2 tapped entries for n° 13 (DIN Pg 13.5) cable gland

Contact block characteristics		
Rated operational characteristics		∿ AC-15, B300 (Ue = 240 V, Ie = 1.5 A; Ue = 120 V, Ie = 3 A) ⎓ DC-13, R300 (Ue = 250 V, Ie = 0.1 A)
Rated insulation voltage	**V**	Ui = 500 conforming to IEC/EN 60947-1
Rated impulse withstand voltage	**kV**	U imp = 6 conforming to IEC/EN 60947-1
Type of contacts		1 C/O single-pole contact, snap action
Terminal referencing		Conforming to CENELEC EN 50013
Short-circuit protection		10 A cartridge fuse type gG (gI)
Connection		Screw clamp terminals Minimum clamping capacity: 1 x 1 mm^2 Maximum clamping capacity: 2 x 2.5 mm^2
Electrical durability		a.c. supply 50/60 Hz, Ith = 10 A Inductive circuit, utilisation category AC-15, 3 A/240 V: 1 million operating cycles

ORLANDO srl

References, characteristics

Electromechanical pressure switches

For control circuits, type XMX
Sizes 6 to 25 bar (87 to 362.5 psi)
Adjustable differential, for regulation between 2 thresholds
Switches with 1 C/O single-pole contact

Pressure switches type XMX (internal setting screw)

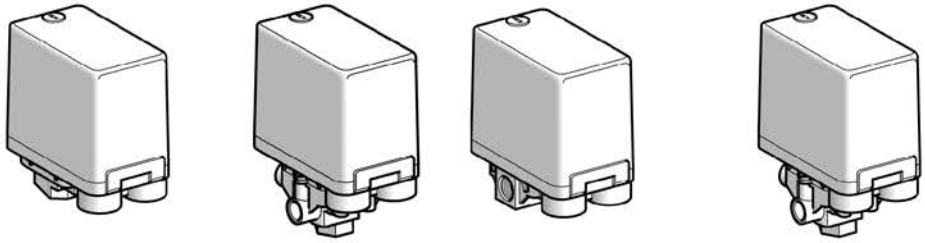

Adjustable range of switching point (PH) (Rising pressure)		**1…6 bar (14.5…87 psi)**	**1.3…12 bar (18.85…174 psi)**	**3.5…25 bar (50.75…362.5 psi)**	**1…6 bar (14.5…87 psi)**	**1.3…12 bar (18.85…174 psi)**	**3.5…25 bar (50.75…362.5 psi)**
Fluid connection		G 1/4 (BSP female)			4 x G 1/4 (BSP female)		
References							
Switches with black opaque cover							
Fluids controlled	Air, fresh water, sea water *(1)*	**XMX A06L2135**	**XMX A12L2135**	**XMX A25L2135**	**XMX A06L2435**	**XMX A12L2435**	**XMX A25L2435**
Weight (kg)		0.430		0.650	0.430		0.650
Complementary characteristics not shown under general characteristics (page 30383/3)							
Possible differential (subtract from PH to give PB)	Min. at low setting	0.8 bar (11.6 psi)	1 bar (14.5 psi)	3.4 bar (49.3 psi)	0.8 bar (11.6 psi)	1 bar (14.5 psi)	3.4 bar (49.3 psi)
	Min. at high setting	1.2 bar (17.4 psi)	1.7 bar (24.6 psi)	4.5 bar (65.2 psi)	1.2 bar (17.4 psi)	1.7 bar (24.6 psi)	4.5 bar (65.2 psi)
	Max. at high setting	4.2 bar (60.9 psi)	8.4 bar (121.8 psi)	20 bar (290 psi)	4.2 bar (60.9 psi)	8.4 bar (121.8 psi)	20 bar (290 psi)
Maximum permissible pressure	Per cycle	7.5 bar (108.7 psi)	15 bar (217.5 psi)	31.25 bar (453.1 psi)	7.5 bar (108.7 psi)	15 bar (217.5 psi)	31.25 bar (453.1 psi)
	Accidental	13.5 bar (195.7 psi)	27 bar (391.5 psi)	56.25 bar (815.6 psi)	13.5 bar (195.7 psi)	27 bar (391.5 psi)	56.25 bar (815.6 psi)
Destruction pressure		30 bar (435 psi)		100 bar (1450 psi)	30 bar (435 psi)		100 bar (1450 psi)
Mechanical life		1 x 10^6 operating cycles					
Cable entry		2 entries tapped for n° 13 cable gland, conforming to NF C 68-300 (DIN Pg 13.5)					
Pressure switch type		Diaphragm					

(1) Component materials of units in contact with the fluid, see page 30383/3.

Operating curves

XMX A06●●●●●

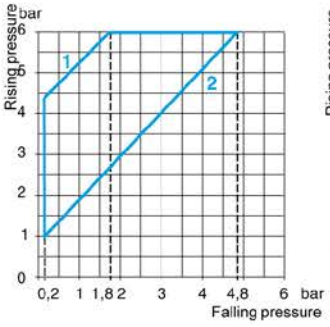

1 Maximum differential
2 Minimum differential

XMX A12●●●●●

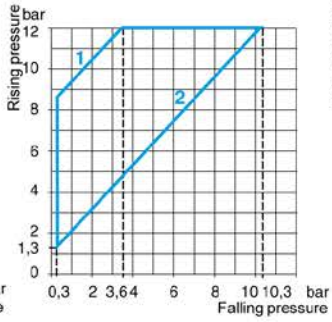

1 Maximum differential
2 Minimum differential

XMX A25●●●●●

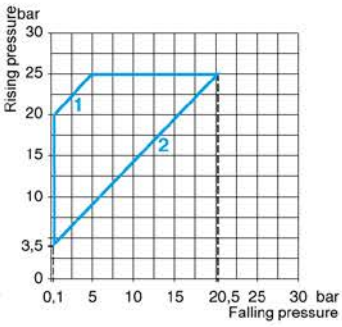

1 Maximum differential
2 Minimum differential

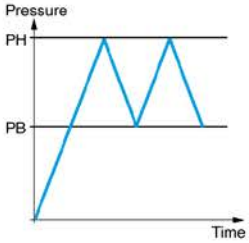

— Adjustable value

Connections

Other versions

Pressure switches with alternative tapped cable entries: ISO, NPT, etc.
Please consult your Regional Sales Office.

ORLANDO srl

Chiavari (Ge) Italia
Tel: Italia + 0185 + 38.50.10
Fax: Italia + 0185 + 38.50.11
e-mail: orlando@orlando.it
http://www.orlando.it

References, characteristics

Electromechanical pressure switches

For control circuits, type XMA
Sizes 6 to 25 bar (87 to 362.5 psi)
Adjustable differential, for regulation between 2 thresholds
Switches with 1 C/O single-pole contact

Pressure switches type XMA (external setting screw)

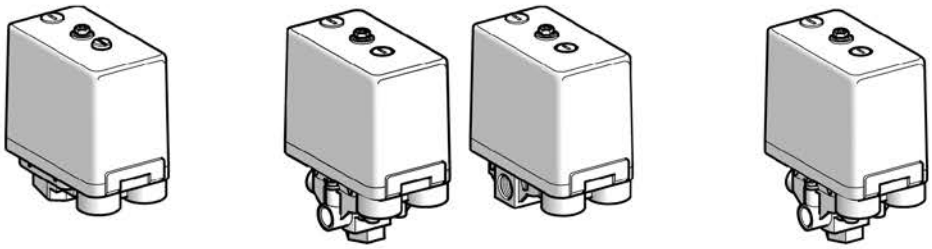

Adjustable range of switching point (PH) (Rising pressure)		**1…6 bar (14.5…87 psi)**	**1.3…12 bar (18.85…174 psi)**	**3.5…25 bar (50.75…362.5 psi)**	**1…6 bar (14.5…87 psi)**	**1.3…12 bar (18.85…174 psi)**	**3.5…25 bar (50.75…362.5 psi)**
Fluid connection		G 1/4 (BSP female)			4 x G 1/4 (BSP female)		
References							
Switches with black opaque cover							
Fluids controlled	Air, fresh water, sea water *(1)*	**XMA H06L2135**	**XMA H12L2135**	**XMA H25L2135**	**XMA H06L2435**	**XMA H12L2435**	**XMA H25L2435**
Switches with transparent cover							
Fluids controlled	Air, fresh water, sea water *(1)*	**XMA V06L2135**	**XMA V12L2135**	**XMA V25L2135**	**XMA V06L2435**	**XMA V12L2435**	**XMA V25L2435**
Weight (kg)		0.430		0.650	0.430		0.650
Complementary characteristics not shown under general characteristics (page 30383/3)							
Possible differential (subtract from PH to give PB)	Min. at low setting	0.8 bar (11.6 psi)	1 bar (14.5 psi)	3.4 bar (49.3 psi)	0.8 bar (11.6 psi)	1 bar (14.5 psi)	3.4 bar (49.3 psi)
	Min. at high setting	1.2 bar (17.4 psi)	1.7 bar (24.6 psi)	4.5 bar (65.2 psi)	1.2 bar (17.4 psi)	1.7 bar (24.6 psi)	4.5 bar (65.2 psi)
	Max. at high setting	4.2 bar (60.9 psi)	8.4 bar (121.8 psi)	20 bar (290 psi)	4.2 bar (60.9 psi)	8.4 bar (121.8 psi)	20 bar (290 psi)
Maximum permissible pressure	Per cycle	7.5 bar (108.7 psi)	15 bar (217.5 psi)	31.25 bar (453.1 psi)	7.5 bar (108.7 psi)	15 bar (217.5 psi)	31.25 bar (453.1 psi)
	Accidental	13.5 bar (195.7 psi)	27 bar (391.5 psi)	56.25 bar (815.6 psi)	13.5 bar (195.7 psi)	27 bar (391.5 psi)	56.25 bar (815.6 psi)
Destruction pressure		30 bar (435 psi)		100 bar (1450 psi)	30 bar (435 psi)		100 bar (1450 psi)
Mechanical life		1 x 10^6 operating cycles					
Cable entry		2 entries tapped for n° 13 cable gland, conforming to NF C 68-300 (DIN Pg 13.5)					
Pressure switch type		Diaphragm					

(1) Component materials of units in contact with the fluid, see page 30383/3.

Operating curves

XMA •06•••••

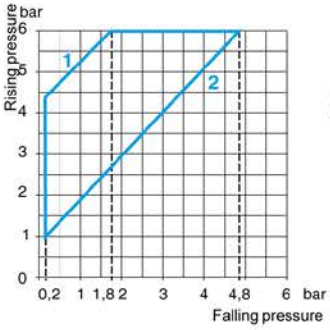

1 Maximum differential
2 Minimum differential

XMA •12•••••

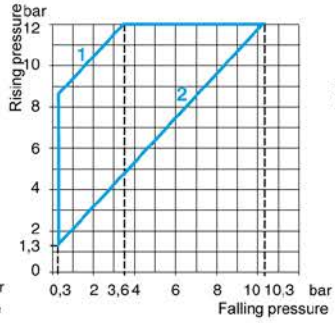

1 Maximum differential
2 Minimum differential

XMA •25•••••

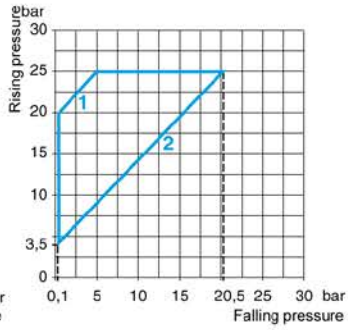

1 Maximum differential
2 Minimum differential

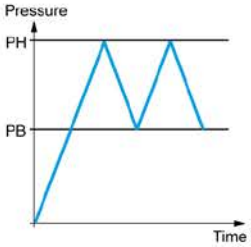

— Adjustable value

Connections

Other versions

Pressure switches with alternative tapped cable entries: ISO, NPT, etc.
Please consult your Regional Sales Office.

ORLANDO srl

Chiavari (Ge) Italia
Tel: Italia + 0185 + 38.50.10
Fax: Italia + 0185 + 38.50.11
e-mail: orlando@orlando.it
http://www.orlando.it

PM/5 - PT/5 - PM/12 – PT/12 - PRESSURE SWITCHES FOR WATER SYSTEM APPLICATIONS

Cod: IT PT 5 - IT PM 5

Cod: IT ORL PT 5 40

PM/5 - PM/12 - PT/5 - PT/12

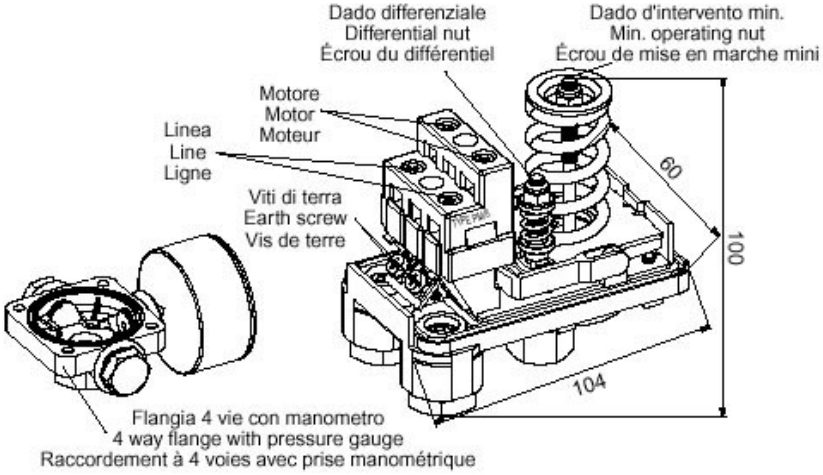

- Pressure switches for use with water in **autoclave systems**.
- The switch ensures automatically the starting and stopping of the electric pump according to the set pressure values.
- Electric contacts: normally closed and made of brass alloy with Ag-Ni surfacing.
- Terminals with M4 screws and 8x8 mm pressure dice.
- NBR rubber membrane with textile insert (food grade for PM/5 - PT/5).
- ¼" F hydraulic connection made of galvanized steel.
- Standard protection degree IP 44.
- Max ambient temperature: 55°C.
- Tear resistant cable clamps.

ORLANDO srl

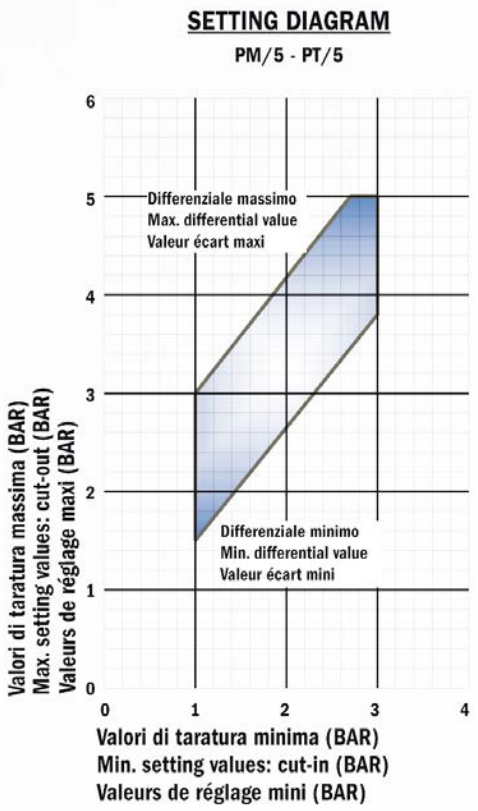

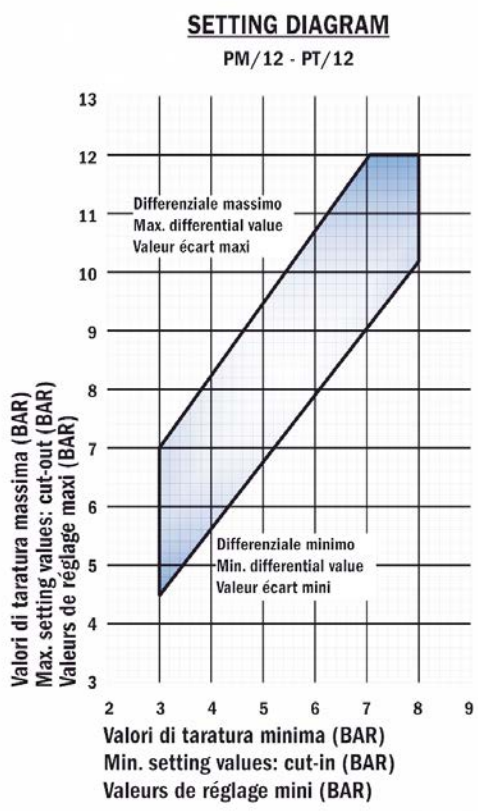

TECHNICAL DATA	PM/5	PM/6	PM/12	PT/5	PT/6	PT/12
Campo di regolazione: Pressure range: Limite d'utilisation:	1 - 5 bar	1,5 - 5,5 bar	3 - 12 bar	1 - 5 bar	1,5 - 5,5 bar	3 - 12 bar
Taratura di fabbrica: Factory setting: Réglage d'usine:	1,4 - 2,8 bar	1,8 - 3 bar	5 - 7 bar	1,4 - 2,8 bar	1,8 - 3 bar	5 - 7 bar
Differenziale minimo: Min differential: Écart mini:	0,6 bar	0,8 bar	1,5 bar	0,6 bar	0,8 bar	1,5 bar
Differenziale massimo: Max differential Écart maxi:	2,3 bar	2,2 bar	5 bar	2,3 bar	2,2 bar	5 bar
Corrente nominale: Rated current: Courant nominal:	16A (10)A	16A (10)A	16A (10)A	16A (10)A	16A (10)A	16A 10)A
Tensione nominale: Rated voltage: Tension nominale:	250V	250V	250V	500V	500V	500V

CERTIFICATIONS/COMPLIANCES

CE

Conformità alla Direttiva 2002/96/CE (RoHS)
Compliant to 2002/96/CE Regulation
Conformément à la norme 2002/96/CE

A richiesta / Upon request / Sur demande:

- TÜV, Germany
- SEMKO, Sweden
- NEMKO, Norway
- MEEI, Hungary
- UR, United States of America

ORLANDO srl

Chiavari (Ge) - Italia
Tel.: Italia + 0185 + 38.50.10
Fax: Italia + 0185 + 38.50.11
e-mail: orlando@orlando.it
Http://www.orlando.it

SC FSG 2; SC FYG 22; SC FYG 32: ELECTROMECHANICAL PRESSURE SWITCHES:
Pressure switches types FSG and FYG are switches for power circuits. They are used to control the pressure of water, up to 10.5 ba, with adjustable differential for regulation between 2 thresholds. Switches with 2-pole 2 NC contact. Mechanical life: 1x 10^6 operating cycles. Cable entry: 2 cable entries, with grommet - Pressure switch type: diaphragm. - Destruction pressure: 20 bar (290 psi) -

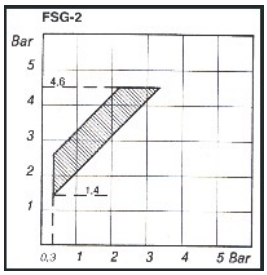

SC FSG 2

•Fluid connection: G ¼ (BSP female)
•Fluids controlled: fresh water, sea water from 0°C to + 70°C
•Degree of protection: IP 20 (IP 65 for type FSG2 NE)
• **Adjustable range of switching point (PH): 0-6 bar**
•Maximum permissible pressure: *per cycle:* 5.75 bar, *accidental*: 8 bar

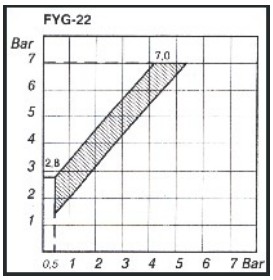

SC FYG 22

•Fluid connection: G ¼ (BSP female)
•Fluids controlled: fresh water, sea water from 0°C to + 70°C
•Degree of protection: IP 20 (IP 65 for type FYG2 NE)
• **Adjustable range of switching point (PH): 2.8....7 bar (40.6... 101.5 psi)**
•Maximum permissible pressure: *per cycle:* 8.75 bar (126.9 psi) , *accidental*: 15 bar (217.5 psi)

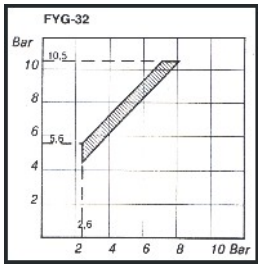

SC FYG 32

•Fluid connection: G ¼ (BSP female)
•Fluids controlled: fresh water, sea water from 0°C to + 70°C
•Degree of protection: IP 20 (IP 65 for type FYG2 NE)
• **Adjustable range of switching point (PH): 5.6....10.5 bar (81.2... 152.3 psi)**
•Maximum permissible pressure: *per cycle:* 13 bar (188.5. psi) , *accidental*: 15 bar (217.5 psi)

ORLANDO srl

Chiavari (Ge) - Italia
Tel.: Italia + 0185 + 38.50.10
Fax: Italia + 0185 + 38.50.11
e-mail: orlando@orlando.it
Http://www.orlando.it

Electromechanical pressure switches Square D 9013 type FSG according to UL508 and CSA. Pressure switches with adjustable differential.
• Hydraulic connection: G ¼ (gas female)
• Pressure: 20-40 PSI
• Ambient temperature: *For operation*: 0°C (32°F) min up to 125°C (257°F) max for storage*: -30°C (-22°F) min up to 0°C (158°F)*
• Operating rate: 10 cycles/m
• Electrical durability: 100,000 cycles
• Mechanical durability: 300,000 cycles

SC 9013 FSG2J20B8M4C4

MINIMUM AND MAXIMUM PRESSURE SWITCHES WITH MANUAL RESET FOR HEATING SYSTEMS PMR/5

- Safety pressure switches for heating systems applications
- The devices automatically stop the heat generator when a pre-set water pressure limit is reached
- Reset is exclusively manual by pressing the manual reset key after the pressure has returned by at least 0.4 bar within the shutoff value
- **External graduated scale** on the instrument
- Double normally closed electric contact in brass alloy with Ag-Ni coating
- Terminals with M4 screws and 8x8 mm pressure dice
- NBR rubber membrane with textile insert
- ¼" F hydraulic connection made of galvanised steel
- Standard protection degree IP 44
- Tear resistant cable clamps
- Maximum fluid temperature: 110°C
- Max ambient temperature 55°C
-

APPLICATIONS: Pressure switches for heating systems, Pressure switches for firefighting systems

IT PMR5 R2
(This item replaces SC FSG2 V2 pressure switches which is no more produced)

• Electric contact: NC
• Pressure range: 1-5 bar
• Factory setting: 3 bar
• Rated current: 16A (10) A
• Rated Voltage: 250V

ORLANDO srl

Chiavari (Ge) - Italia
Tel.: Italia + 0185 + 38.50.10
Fax: Italia + 0185 + 38.50.11
e-mail: orlando@orlando.it
Http://www.orlando.it

SC XMP C06C 2941 S701:
(model with F 1/4" pressure gauge connection and 1/2"Female connection ; model with ON/OFF)

ELECTROMECHANICAL PRESSURE SWITCHES for power circuits, type XMP

Pressure switches type XMP are switches for power circuits (direct switching) with an adjustable differential, for regulation between 2 thresholds.
They are used to control the pressure of water and air up to 25 bar.
•Conformity to standards: CE, IEC/EN 60947-4-1-
•Ambient air temperature: for operation: -25°C...+ 70°C, for storage: - 40°C...+ 70°C
• Materials: Case in polyamide impregnated with fibreglass; component materials in contact with fluid: chromated zinc alloy (fluid entry), canvas covered nitrile (diaphragm)
•Operating rate: <= 600 cycles/h
• Electrical connection: 2 tapped entries for n°13 (DIN Pg 13.5) cable gland
•Destruction pressure: 30 bar (435 psi)
•Mechanical life: 1 million operating cycles
•Pressure type: Diaphragm

SC XMX A 06 L:

ELECTROMECHANICAL PRESSURE SWITCHES for control circuits type XMX, with an adjustable differential. Pressure switches type XMX have an internal setting screw that is only accessible after removing the cover. Pressure switches type XMX have a black opaque case.
They are used to control the pressure of water and air up to 25 bar.
•Conformity to standards: CE, IEC/EN 60947-5-1-
•Ambient air temperature: for operation: -25°C...+ 70°C (for 6 and 25 bae) – 25°C...+55 for 12 bar versions: for storage: - 40°C...+ 70°C
• Fluids controlled: air, fresh water, sea water: 0...+70°C for 6 and 25bar versions, 0...+55°C for 12 bar versions
•Operating rate: <= 600 cycles/h
•Electric shock protection: Class I conforming to IEC 536
•Degree of protection: IP 54 conforming to IEC/EN 60529

ORLANDO srl

Chiavari (Ge) - Italia
Tel.: Italia + 0185 + 38.50.10
Fax: Italia + 0185 + 38.50.11
e-mail: orlando@orlando.it
Http://www.orlando.it

RANGE OF TELEMECANIQUE PRESSURE SWITCHES

CODE	Switching point on rising pressure (PII)	Type of contact	Fluid connection	Packing
SC XMA V06L 2135	1-6 Bar (14,5...87 psi)		G 1/4 (BSP female)	1
SC XMA V12L 2135	1-6 Bar (14,5...87 psi)		G 1/4 (BSP female)	1
SC XMP A06B 2131	1-6 Bar (14,5...87 psi)	2-pole 2 "NC"	G 1/4 (BSP female)	1
SC XMP A06B 2131 C	1-6 Bar (14,5...87 psi)	2-pole 2 "NC"	G 1/4 (BSP female)	10
SC XMP A06B 2141 C205	1-6 Bar (14,5...87 psi)	2-pole 2 "NC"	G 1/4 (BSP female)	10
SC XMP A06C 2131	1-6 Bar (14,5...87 psi)	3-pole 3 "NC"	G 1/4 (BSP female)	1
SC XMP A06C 2131 C	1-6 Bar (14,5...87 psi)	3-pole 3 "NC"	G 1/4 (BSP female)	10
SC XMP A06C 2242	1-6 Bar (14,5...87 psi)	3-pole 3 "NC"	G 3/8"(BSP female)	1
SC XMP A12B 2131	1,3-12 Bar (18,85...174 psi)	2-pole 2 "NC"	G 1/4 (BSP female)	1
SC XMP A12B 2131C	1,3-12 Bar (18,85...174 psi)	2-pole 2 "NC"	G 1/4 (BSP female)	10
SC XMP A12B 2141C	1,3-12 Bar (18,85...174 psi)	2-pole 2 "NC"	G 1/4 (BSP female)	10
SC XMP A12B 2142	1,3-12 Bar (18,85...174 psi)	2-pole 2 "NC"	G 1/4 (BSP female)	1
SC XMP A12C 2131	1,3-12 Bar (18,85...174 psi)	3-pole 3 "NC"	G 1/4 (BSP female)	1
SC XMP A12C 2131C	1,3-12 Bar (18,85...174 psi)	3-pole 3 "NC"	G 1/4 (BSP female)	10
SC XMP A12C 2242	1,3-12 Bar (18,85...174 psi)	3-pole 3 "NC" '	G 3/8"(BSP female)	1
SC XMP A25B 2131	3,5-25 Bar (50,75...362,5 psi)	2-pole 2 "NC"	G 1/4 (BSP female)	1
SC XMP C06C 2374N	1-6 Bar (14,5...87 psi)	3-pole 3 "NC"	G ½ (BSP female)	1
SC XMP C06C 2374N30	1-6 Bar (14,5...87 psi)	3-pole 3 "NC"	G ½ (BSP female)	1
SC XMP C06C 2941S701	1-6 Bar (14,5...87 psi)	3-pole 3 "NC"	n.1 1/2"F + n.1 1/4"F	1
SC XMP C12C 2241	1,3-12 Bar (18,85...174 psi)	3-pole 3 "NC"	G 1/4 (BSP female)	1
SC XMP C12C 2941S702	1,3-12 Bar (18,85...174 psi)	3-pole 3 "NC"	G ½ (BSP female)	1
SC XMP E12B 2131	1,3-12 Bar (18,85...174 psi)	2-pole 2 "NC"	G 1/4 (BSP female)	1
SC XMP E12C 2131C	1,3-12 Bar (18,85...174 psi)	3-pole 3 "NC"	G 1/4 (BSP female)	10
SC XMP E12C 2141	1,3-12 Bar (18,85...174 psi)	3-pole 3 "NC"	G 1/4 (BSP female)	1
SC XMP E12C 2141C	1,3-12 Bar (18,85...174 psi)	3-pole 3 "NC"	G 1/4 (BSP female)	10
SC XMP N12C 2571	1,3-12 Bar (18,85...174 psi)	3-pole 3 "NC"	n.1 3/8"G + n.3 1/4"G	1
SC XMP R12C 2131	1,3-12 Bar (18,85...174 psi)	3-pole 3 "NC"	G 1/4 (BSP female)	1
SC XMX A06L 2135	1-6 Bar (14,5...87 psi)		G 1/4 (BSP female)	1
SC XMX A06L 2945S	1-6 Bar (14,5...87 psi)		n.1 1/2"F + n.1 1/4"F	1
SC XMX A12L 2135	1,3-12 Bar (18,85...174 psi)		G 1/4 (BSP female)	1
SC XMX A25L 2135	1,3-12 Bar (18,85...174 psi)		G 1/4 (BSP female)	1

ORLANDO srl

Chiavari (Ge) Italia
Tel.: Italy + 0185 + 38.50.10
Fax: Italy + 0185 + 38.50.11
e-mail: orlando@orlando.it
http://www.orlando.it

PRESSURE SWITCH FOR PRESSURES UP TO 9 BAR in WEATHERPROOF CASIN IP 65 (Y)

Cod: SC B12 CNY:

USE
-Pressostats for control and regulation of all fluids and gases except the propellent type.
-Suitable for compression plants, boilers, tanks, autoclaves, ventilation plants, lubrication plants .
-If used as control pressostats verify that max. pressure does not exceed max. sensitive element pressure.(See table)

INSTALLATION AND OPERATION
-Stainless steel sensing element membrane.
-Adjustable differential.
-Female G ¼" connection (17mm. key).
-Execution for refrigerant fluids with 1/4"SAE connection

TECHNICAL FEATURES
-Metallic frame.
-Cover in antishock thermoplastic material .
-PVC grommet for cable entry.

HOMOLOGATION AND STANDARDS
-Complies with CEI EN60947-5-1 standards

Nominal insulation		Ui 415V~	
Continuous duty nominal current	Ith 16A		
Operating nominal current	Ie:		
		220V-	380/415V~
Resistive load	AC-1	-	16A
Inductive load	AC-3	-	6A
Continuous nominal current	DC-13	0.2A	-

ELECTRICAL FEATURES
-Snap action SPDT microswitch, contacts in silver alloy.
-When pressure rises: 1-2 opens 1-4 closes

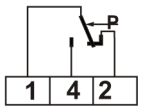

TYPE	RANGE bar	Differential bar *	Max. sensitive element pressure bar	Max. fluid temperature °C ♦	Maximum pressostat body temperature °C ●	Protection	Weight each Kg	Box pcs. No
SC B12 CNY	-0,2 to 8	0,6 to 3	9	120	-35 to 60	**IP 65**	0.37	